AquiTron | AT-OPSEN

Optical Sensor

DATA SHEET

aquilar
leak detection solutions

AT-OPSEN
Optical Sensor

The AT-OPSEN Optical liquid detection sensor has been designed for instant detection of fuel oils and any other none aggressive liquids. The optical sensor can be used with any of the TraceTek and AquiTron leak detection panels and is fully compatible with all TT1000, TT1100, TT3000, TT5000 and TT7000 system components.

SIMPLE OPERATION

The electro-optic sensor contains an infrared LED and a light receiver. Light from the LED is directed into a prism which forms the tip of the sensor. With no liquid present, light from the LED is reflected within the prism to the receiver. When rising liquid immerses the prism, the light is refracted out into the liquid, leaving little or no light to reach the receiver. Sensing this change, the receiver actuates electronic switching within the AT-OPSEN to operate a red LED for visual alarm and operates a relay which initiates an alarm on the TraceTek or AquiTron™ alarm panel. AT-OPSEN can also be used as level switches, and are suitable for high, low or intermediate level detection in practically any tank, large or small. Installation is simple and quick through the tank top, bottom or side. Solid state-switching ensures dependability over long service life. The sensor offers ±1mm repeatability and broad liquid compatibility. They are not recommended for use in any liquid that crystallizes or leaves a solid residue.

This diagram shows the liquid contacting the sensor when the sensor is placed in a remote housing for level control, its operation is the same when housed in the casing featured above

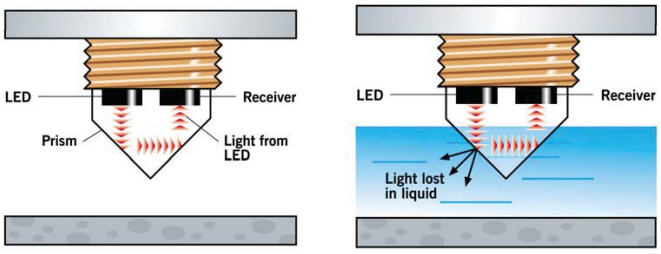

VERSATILE DESIGN

Floor or Tray Mount: The Sensor unit has been designed to be stable without fixings although screw slots are provided. Alternatively, the unit can be secured with a construction adhesive. The high visibility orange colour base and power/leak LED's provide ease of location in low light, or locations where equipment and wiring are

Unit 30, Lawson Hunt Industrial Park,
Broadbridge Heath, Horsham, West Sussex,
RH12 3JR
+44 (0) 1403 216100
info@aquilar.co.uk
www.aquilar.co.uk

densely packed. The use of the optical sensor allows the monitoring for leaks in areas where sensing cables would be difficult to install, either because of the harsh operating environment in which detection is required, or the practicality of installing lengths of sensor cable in vulnerable areas. The unit operates on an optical prism which is resistant to all fuel oils and many other liquids. It's sealed enclosure makes the unit liquid tight, easily cleaned and reusable.

APPLICATIONS

The probe has been designed for seamless integration into TraceTek detection systems, either with or without sensor cable, to provide a truly versatile sensor system. For distributed applications, up to 100 probes may be interconnected by a single jumper cable (daisy chain) and monitored for leak location utilising either TTDM-128 or TTSIM-1 / 1A / 2 alarm and locating modules, providing leak location in either metres, feet or zones. (see panel data sheets for maximum probe quantities). Red and green LED's are provided to indicate power healthy (green) or leak detected (red).

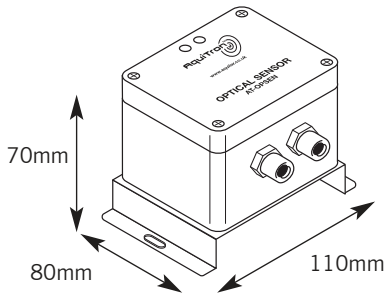

TECHNICAL INFORMATION

Dimensions	80L x 110W x 70Hmm
Base/guard plate	Epoxy coated vibrant orange steel
Probe	Optical sensor technology
Probe Depth	Adjustable (2.5 mm span)
Housing	Grey polycarbonate
Connections	Plug & socket type terminal strips
Power	12Vdc, at 70mA
Cable	6 core screened, 22 AWG, max 100 mtrs
IP Rating	IP 67
LED	Green - Power / Red - Liquid detected

APPROVALS

Electromagnetic compatibility (EMC)	
Compliant with standards for emissions	EN50082-1 (light industrial)
Compliant with standards for immunity	EN50081-1 (residential/commercial) EN55022 and FCC Part 15, Class B

ORDERING INFORMATION

Catalogue number	3540 - AT-OPSEN
	3545 - AT-OPSEN-RS
	3680 - AT-PSU-1 (maximum 10 optical sensors)
	3690 - AT-OPSEN-CBL (50 metre reel)

Unit 30, Lawson Hunt Industrial Park,
Broadbridge Heath, Horsham, West Sussex,
RH12 3JR
+44 (0) 1403 216100
info@aquilar.co.uk
www.aquilar.co.uk

CONFIGURATION EXAMPLES

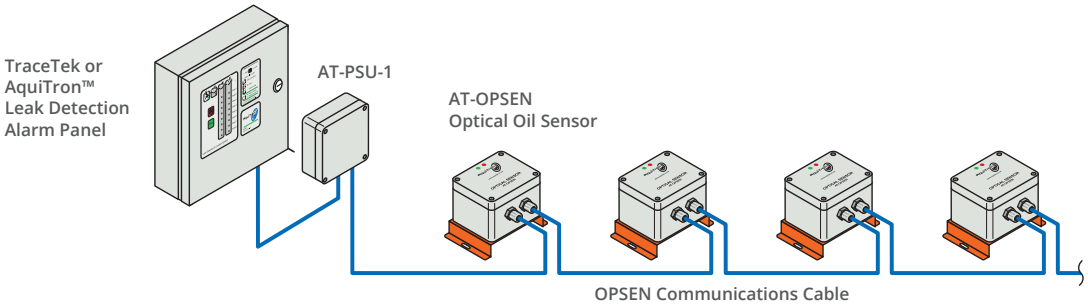

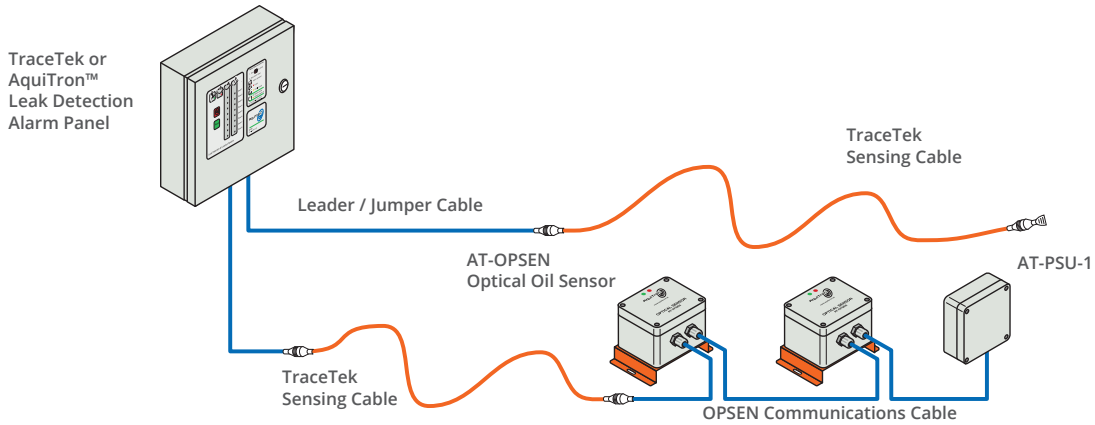

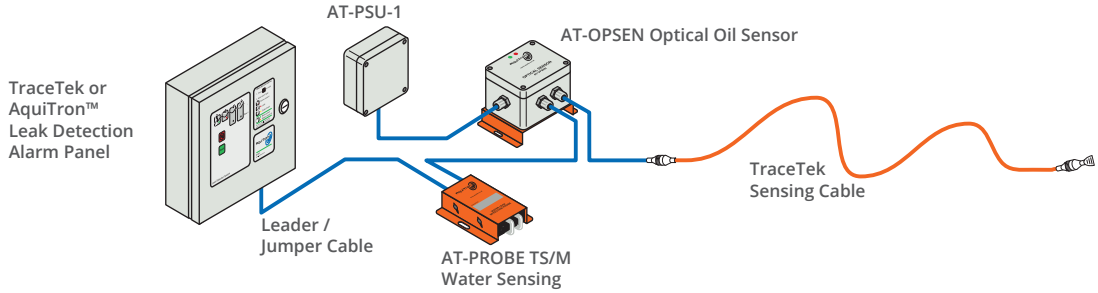

Important: All information, including illustrations, is believed to be reliable. Users, however, should independently evaluate the suitability of each product for their application. Aquilar Limited makes no warranty as to the accuracy or completeness of the information, and disclaims any liability regarding its use. The only obligations of Aquilar Limited are those in the Aquilar Standard Terms and Conditions of Sale for this product, and in no case will Aquilar Limited be liable for any incidental, indirect, or consequential damages arising from the sale, resale, use or misuse of the product. Specifications are subject to change without notice. In addition, Aquilar Limited reserves the right to make changes – without notification to Buyer – to processing or materials that do not affect compliance with any applicable specification.

AquiTron is a trademark of *AquiTron Limited*
Aquilar is a trademark of *Aquilar Limited*

Unit 30, Lawson Hunt Industrial Park,
Broadbridge Heath, Horsham, West Sussex,
RH12 3JR

+44 (0) 1403 216100

info@aquilar.co.uk

www.aquilar.co.uk

V1 06.2017